25W Isolated DC-DC Power Module

ATMV24VPN150V83R4MA2



Figure 1. Top View ATMV24VPN150V83R4MA2



Figure 2. Side View



Figure 3. Side View



Figure 4. Bottom View

FEATURES

- Wide Input Power Voltage Range: 20V to 36V
- Output Voltage: ±150V
- Max. Output Current: ±83.4mA
- High Efficiency: 83%
  @V_{IN} = 24V & V_{OUT} = ±150V & I_{OUT} = ±83.4mA
- Output Ripple Voltage: ±1% @20MHz
- Isolation Voltage: 1500VDC
- Output Short-Circuit Protection: Automatic Recovery
- Full Aluminum Housing for Complete Shielding
- Industry Standard DIP Package
- Operating Temperature Range: −40°C ~ +85°C
- 100 % Lead (Pb)-free and RoHS Compliant

APPLICATIONS

This power module, ATMV24V150V83R4MA2, is designed for achieving DC-DC conversion from low voltage to high voltage as a power supply source. It is widely used in scientific research and other fields including:

- Sustaining Ion Pumps
- Spectral Analysis
- Electrophoresis
- Particle Accelerator
- Capillary Electrophoresis
- Piezo Devices
- Photo Multiplier Tubes
- Avalanche Photo Diodes

©Copyrights 2000-2026, Analog Technologies, Inc. All Rights Reserved. Updated on 5/18/2026 1161 Ringwood Ct, #110, San Jose, CA 95131, U. S. A.

DESCRIPTION

This power module is a medium voltage, isolated DC−DC converter with 2:1 input voltage range. With a wide operating temperature range, built in short-circuit protection, providing this unit with high reliability and long life.

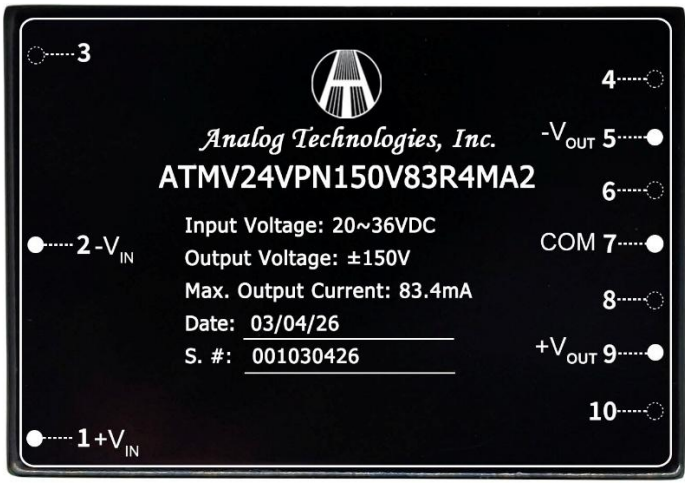

Figure 5. Top View

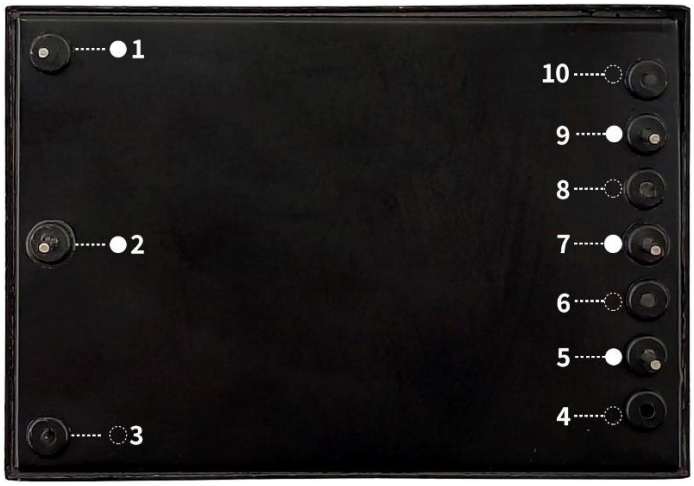

Figure 6. Bottom View

Table 1. Pin Names, Functions and Specifications.

No.	Name	Type	Description	Min.	Typ.	Max.
1	V_{IN+}	Input	Positive Input Voltage	20V	24V	36V
2	V_{IN-}	Input	Negative Input Voltage		0V	
3	NP	-	No Pin	-	-	-
4	NP	-	No Pin	-	-	-
5	V_{OUT-}	Output	Negative Output Voltage			−150V
6	NP	-	No Pin	-	-	-
7	COM	-	Serial port	-	-	-
8	NP	-	No Pin	-	-	-
9	V_{OUT+}	Output	Positive Output Voltage			+150V
10	NP	-	No Pin	-	-	-

©Copyrights 2000-2026, Analog Technologies, Inc. All Rights Reserved. Updated on 5/18/2026 1161 Ringwood Ct, #110, San Jose, CA 95131, U. S. A.

SPECIFICATIONS

Table 2.

Parameter	Symbol	Test Conditions	Min.	Typ.	Max.	Unit/Note
Input Voltage	V_{IN}		20	24	36	V
Input Quiescent Current	I_{IN_QC}	V_{IN} = 24V I_{OUT} = 0mA		63		mA
Input Current	I_{IN}	I_{OUT} = 83.4mA		1250		mA
Leakage Current	I_L			2		mA
Output Voltage	V_{OUT}	V_{IN} = 20V ~ 36V I_{OUT} = −83.4 ~ 83.4mA	−150		+150	V
Output Voltage Accuracy		V_{IN} = 20V ~ 36V		±2		%
Output Current Range	I_{OUTMAX}	V_{IN} = 20V ~ 36V	−83.4		+83.4	mA
Output Voltage Ripple	V_{OUT_RP}	Bandwidth = 20MHz		±1		%
Output Short-Circuit Protection Time	t_{SC}		Sustainable short-circuit operation			
Switching Frequency	f_{SW}	V_{VPS} = 24V Full Load		125		kHz
Line Regulation	$\Delta V_{OUT}/\Delta V_{VPS}$	V_{VPS} = 24V Full Load		±1		%
Load Regulation	$\Delta V_{OUT}/\Delta I_{OUT}$	V_{VPS} = 24V Load change from 10% to 100%		±1		%
Isolation Voltage	V_{IS}			1500		VDC
Isolation Resistance		Input to Output, 500VDC, T_A = 25°C, 70%RH		1000		MΩ
Output Voltage Temperature Coefficient	TCV_{OUT}	V_{VPS} = 24V Full Load			0.03	%/°C
Cooling Method			Air Cooling			
Mean Time Between Failure	MTBF	MIL-HDBK-217F@25°C		1000		Kh
Operating Temperature Range	T_{opr}		−40		85	°C
Storage Temperature Range	T_{stg}		−40		105	°C
Maximum Soldering Temperature on Connection Pins	T_{sld}	Soldering Time:10s			300	°C
Case Temperature Rise	T_{cs}	V_{VPS} = 24V,T_A = 25°C Full Load		35		°C
Storage Relative Humidity Range	RH				95	%
Case Material			Aluminum			
External Dimensions (Exclude Connection Pins)			72.00×40.00×24.00			mm
			2.835×1.575×0.945			inch
Weight				120		g
				0.265		lbs
				4.233		Oz

©Copyrights 2000-2026, Analog Technologies, Inc. All Rights Reserved. Updated on 5/18/2026 1161 Ringwood Ct, #110, San Jose, CA 95131, U. S. A.

TYPICAL PERFORMANCE CHARACTERISTICS

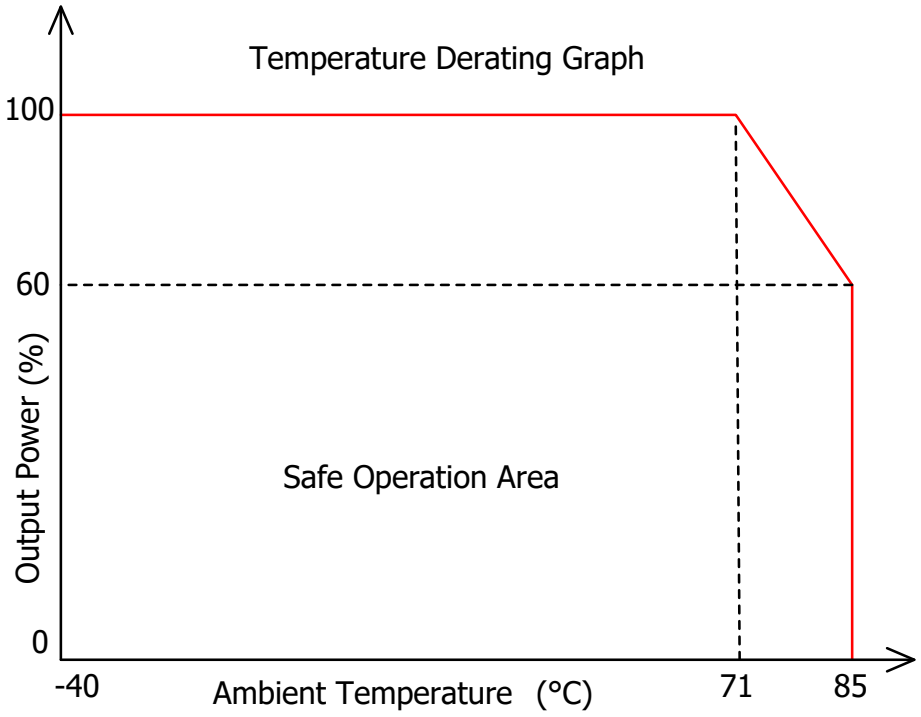

Figure 7. Derating Curve

TYPICAL APPLICATIONS

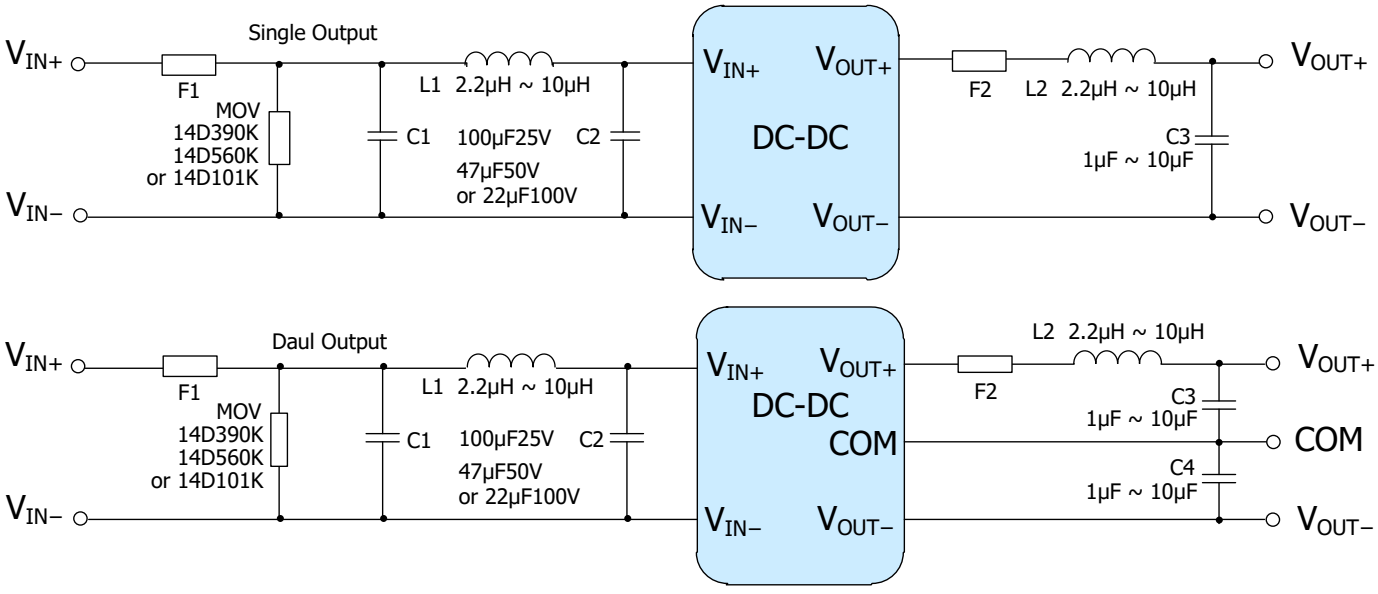

Figure 8. Typical Applications

©Copyrights 2000-2026, Analog Technologies, Inc. All Rights Reserved. Updated on 5/18/2026 1161 Ringwood Ct, #110, San Jose, CA 95131, U. S. A.

Table 3. Recommended Values

F1	Input Time-delay Fuse	
F2 & F3	Output Time-delay Fuse, or Resettable Fuse (PTC)	
MOV	14D390K	Input Voltage: 12VDC
	14D560K	Input Voltage: 24VDC
	14D101K	Input Voltage: 48VDC
C1 & C2	100μF/25V	Input Voltage: 2VDC
	47μF/50V	Input Voltage: 24VDC
	22μF/100V	Input Voltage: 48VDC
C3 & C4	1.0μF ~ 10μF (High Frequency ESR)	
L1, L2 & L3	2.2μH ~ 10μH	

To further reduce the input and output ripple, the parameters of the LC filter can be appropriately increased, but it should be noted that the external capacitor at the output end should not be too large, and should be lower than the maximum capacitive load of the product.

NAMING PRINCIPLE

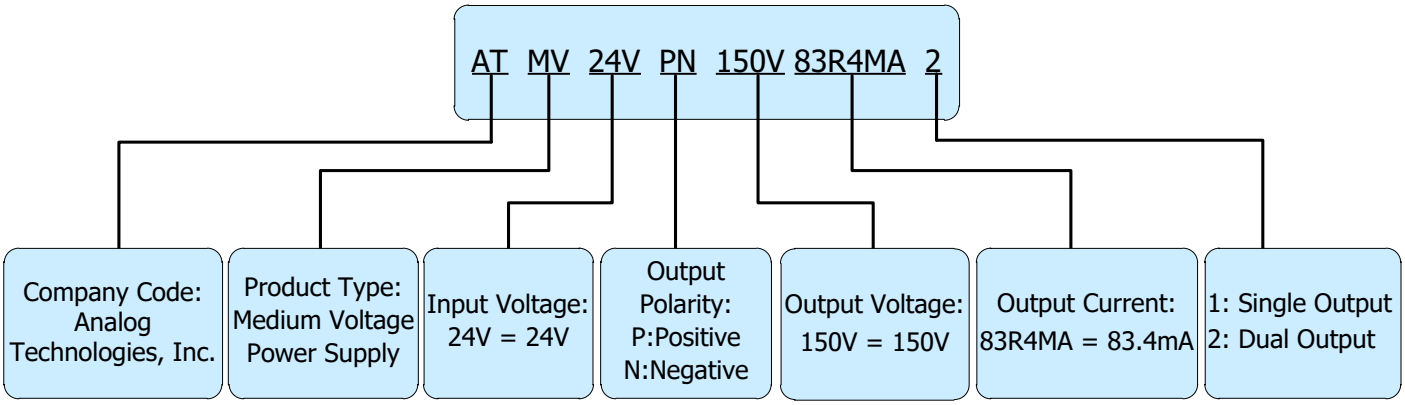

Figure 9. Naming Convention of ATMV24VPN150V83R4MA2

©Copyrights 2000-2026, Analog Technologies, Inc. All Rights Reserved. Updated on 5/18/2026 1161 Ringwood Ct, #110, San Jose, CA 95131, U. S. A.

OUTLINE DIMENSIONS

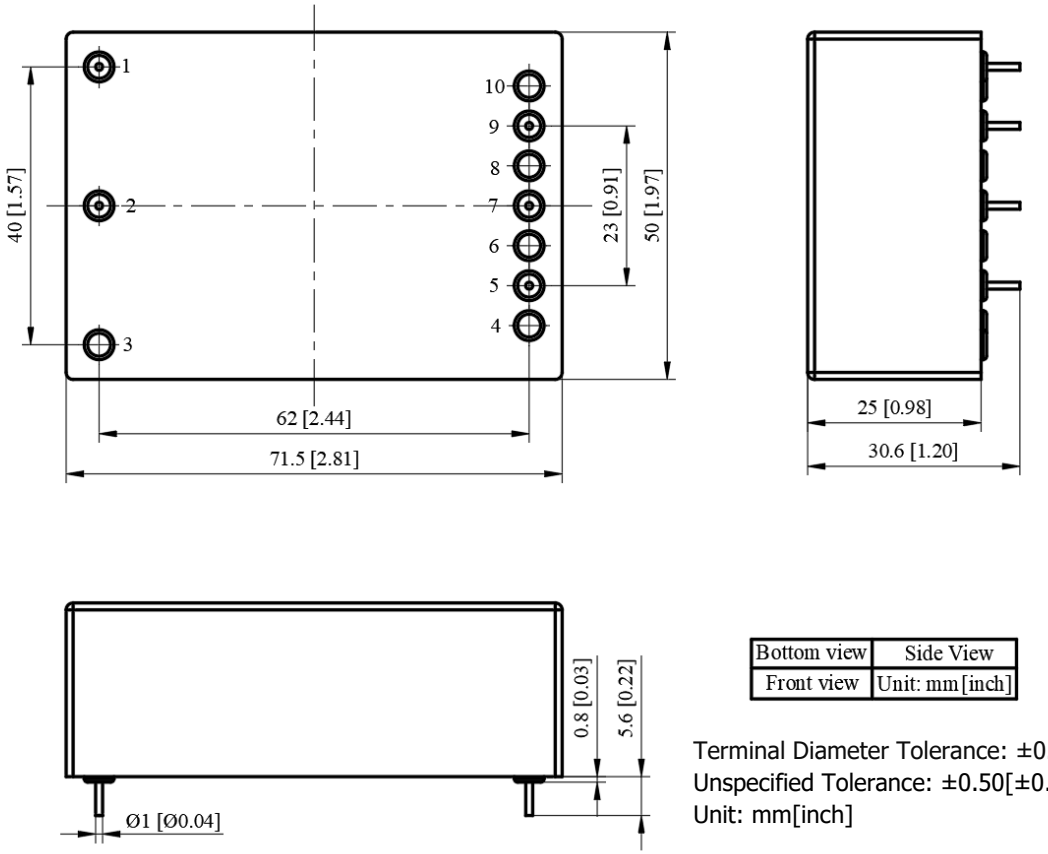

Bottom view	Side View
Front view	Unit: mm[inch]

Terminal Diameter Tolerance: ±0.10[±0.004]
Unspecified Tolerance: ±0.50[±0.020]
Unit: mm[inch]

Pin	1	2	3	4	5	6	7	8	9	10
Single channel	V_{IN+}	V_{IN-}	NP	NP	V_{OUT-}	NP	NP	NP	V_{OUT+}	NP
Dual channel	V_{IN+}	V_{IN-}	NP	NP	V_{OUT-}	NP	COM	NP	V_{OUT+}	NP

Figure 10. Outline Dimensions

ORDERING INFORMATION

Part Number	Buy Now
ATMV24VPN150V83R4MA2	

*: both and are our online store icons. Our products can be ordered from either one of them with the same pricing and delivery time.

©Copyrights 2000-2026, Analog Technologies, Inc. All Rights Reserved. Updated on 5/18/2026 1161 Ringwood Ct, #110, San Jose, CA 95131, U. S. A.

Table 4. ATMV24VPN150V83R4MA2 and Its Families

Product Model	Input Voltage		Output Voltage	Output Current	Efficiency	MAX. Capacitive Load
	Typ.	Range	V	mA	%	µF
ATMV12V50V160MA1	12	9 ~ 18	50	160	78	100
ATMV12V100V80MA1			100	80	76	100
ATMV12V200V40MA1			200	40	75	68
ATMV12V300V20MA1			300	20	74	47
ATMV12V400V10MA1			400	10	73	33
ATMV12V500V8MA1			500	8	72	22
ATMV12V600V6.7MA1			600	6.7	70	10
ATMV12V700V4.3MA1			700	4.3	68	4.7
ATMV24V50V160MA1	24	18 ~ 36	100	80	78	100
ATMV24V200V40MA1			200	40	77	68
ATMV24V300V20MA1			300	20	75	47
ATMV24V400V10MA1			400	10	74	33
ATMV24V500V8MA1			500	8	73	22
ATMV24V600V6.7MA1			600	6.7	71	10
ATMV24V700V4.3MA1			700	4.3	70	4.7
ATMV12V50V80MA2	12	9 ~ 18	±50	±80	76	68
ATMV12V100V40MA2			±100	±40	75	68
ATMV12V150V20MA2			±150	±20	74	47
ATMV12V200V10MA2			±200	±10	73	33
ATMV12V250V8MA2			±250	±8.0	72	22
ATMV12V300V6.6MA2			±300	±6.6	70	10
ATMV24V50V80MA2	24	18 ~ 36	±50	±80	78	68
ATMV24V100V40MA2			±100	±40	77	68
ATMV24V150V20MA2			±150	±20	75	47
ATMV24V200V10MA2			±200	±10	74	33
ATMV24V250V8MA2			±250	±8.0	73	22
ATMV24V300V6.6MA2			±300	±6.6	71	10

©Copyrights 2000-2026, Analog Technologies, Inc. All Rights Reserved. Updated on 5/18/2026 1161 Ringwood Ct, #110, San Jose, CA 95131, U. S. A.

NOTICE

1. ATI warrants performance of its products for one year to the specifications applicable at the time of sale, except for those being damaged by excessive abuse. Products found not meeting the specifications within one year from the date of sale can be exchanged free of charge.
2. ATI reserves the right to make changes to its products or to discontinue any product or service without notice, and advise customers to obtain the latest version of relevant information to verify, before placing orders, that the information being relied on is current and complete.
3. All products are sold subject to the terms and conditions of sale supplied at the time of order acknowledgment, including those pertaining to warranty, patent infringement, and limitation of liability. Testing and other quality control techniques are utilized to the extent ATI deems necessary to support this warranty. Specific testing of all parameters of each device is not necessarily performed, except those mandated by government requirements.
4. Customers are responsible for their applications using ATI products. In order to minimize risks associated with the customers' applications, adequate design and operating safeguards must be provided by the customers to minimize inherent or procedural hazards. ATI assumes no liability for applications assistance or customer product design.
5. ATI does not warrant or represent that any license, either express or implied, is granted under any patent right, copyright, mask work right, or other intellectual property right of ATI covering or relating to any combination, machine, or process in which such products or services might be or are used. ATI's publication of information regarding any third party's products or services does not constitute ATI's approval, warranty or endorsement thereof.
6. IP (Intellectual Property) Ownership: ATI retains the ownership of full rights for special technologies and/or techniques embedded in its products, the designs for mechanics, optics, plus all modifications, improvements, and inventions made by ATI for its products and/or projects.

©Copyrights 2000-2026, Analog Technologies, Inc. All Rights Reserved. Updated on 5/18/2026 1161 Ringwood Ct, #110, San Jose, CA 95131, U. S. A.