12W Isolated DC-DC Power Module

ATMV12V60V200MA1



Figure 1. Top View



Figure 2. Side View



Figure 3. Side View



Figure 4. Bottom View

FEATURES

- Wide Input Power Voltage Range: 10V to 18V
- Output Voltage: 60V
- Max. Output Current: 200mA
- High Efficiency: 78%
  @V_{IN} = 12V & V_{OUT} =60V & I_{OUT} = 200mA
- Output Ripple Voltage: ±1% @20MHz
- Isolation Voltage: 1500VDC
- Output Short-Circuit Protection: Automatic Recovery
- Full Aluminum Housing for Complete Shielding
- Industry Standard DIP Package
- Operating Temperature Range: −40°C ~ +85°C
- 100 % Lead (Pb)-free and RoHS Compliant

APPLICATIONS

This power module, ATMV12V60V200MA1, is designed for achieving DC-DC conversion from low voltage to high voltage as a power supply source. It is widely used in scientific research and other fields including:

- Sustaining Ion Pumps
- Spectral Analysis
- Electrophoresis
- Particle Accelerator
- Capillary Electrophoresis
- Piezo Devices
- Photo Multiplier Tubes
- Avalanche Photo Diodes

©Copyrights 2000-2026, Analog Technologies, Inc. All Rights Reserved. Updated on 2/4/2026 1161 Ringwood Ct, #110, San Jose, CA 95131, U. S. A.

DESCRIPTION

This Power Module is a medium voltage, isolated DC−DC converter with 2:1 input voltage range. With a wide operating temperature range, built in short-circuit protection, providing this unit with high reliability and long life.

Table 1. Pin Names, Functions and Specifications.

No.	Name	Type	Description	Min.	Typ.	Max.
1	V_{IN-}	Input	Negative Input Voltage		0V	
2	V_{IN+}	Input	Positive Input Voltage	10V	12V	18V
3	V_{OUT+}	Output	Positive Output Voltage			60V
4	NP		-			
5	V_{OUT-}	Output	Negative Output Voltage		0V	

SPECIFICATIONS

Table 2.

Parameter	Symbol	Test Conditions	Min.	Typ.	Max.	Unit/Note
Input Voltage	V_{IN}		10	12	18	V
Input Quiescent Current	I_{IN_QC}	I_{OUT} = 0mA		41		mA
Input Current	I_{IN}	I_{OUT} = 200mA		835		mA
Leakage Current	I_L			2		mA
Output Voltage	V_{OUT}	V_{IN} = 10V ~ 18V I_{OUT} = 0 ~ 200mA	0		60	V
Output Voltage Accuracy		V_{IN} = 10V ~ 18V		±2		%
Output Current Range	I_{OUTMAX}	V_{IN} = 18V ~ 36V	0		200	mA
Output Voltage Ripple	V_{OUT_RP}	Bandwidth = 20MHz		±1		%
Output Short-Circuit Protection Time	t_{SC}			≤60		s
Switching Frequency	f_{SW}	V_{VPS} = 12V I_{OUT} = 200mA		125		kHz
Line Regulation	$\Delta V_{OUT}/\Delta V_{VPS}$	V_{VPS} = 12V I_{OUT} = 200mA		±1		%
Load Regulation	$\Delta V_{OUT}/\Delta I_{OUT}$	V_{VPS} = 24V Load change from 10% to 100%		±1		%
Isolation Voltage	V_{IS}			1500		VDC
Isolation Resistance		V_{VPS} = 10V ~ 18V V_{OUT} = 60V V_{IS} = 1500VDC I_{OUT} = 200mA T_A = 25℃ 70%RH		1000		MΩ

©Copyrights 2000-2026, Analog Technologies, Inc. All Rights Reserved. Updated on 2/4/2026 1161 Ringwood Ct, #110, San Jose, CA 95131, U. S. A.

Parameter	Symbol	Test Conditions	Min.	Typ.	Max.	Unit/Note
Isolation Capacitance				1		nF
Output Voltage Temperature Coefficient	TCV_{OUT} (1)	V_{VPS} = 12V I_{OUT} = 200mA			0.03	%/°C
Cooling Method			Air Cooling			
Mean Time Between Failure	MTBF	MIL-HDBK-217F@25°C		1000		Kh
Operating Temperature Range	T_{opr}		−40		85	°C
Storage Temperature Range	T_{stg}		−40		105	°C
Maximum Soldering Temperature on Connection Pins	T_{sld}	Soldering Time:10s			300	°C
Case Temperature Rise	T_{cs}	V_{VPS} = 12V I_{OUT} = 200mA T_A = 25℃		35		°C
Storage Relative Humidity Range	RH				95	%
Case Material			Aluminum			
External Dimensions (Exclude Connection Pins)			50.8×25.4×10.5			mm
			2×1×0.41			inch
Weight				25		g
				0.055		lbs
				0.881		Oz

TYPICAL PERFORMANCE CHARACTERISTICS

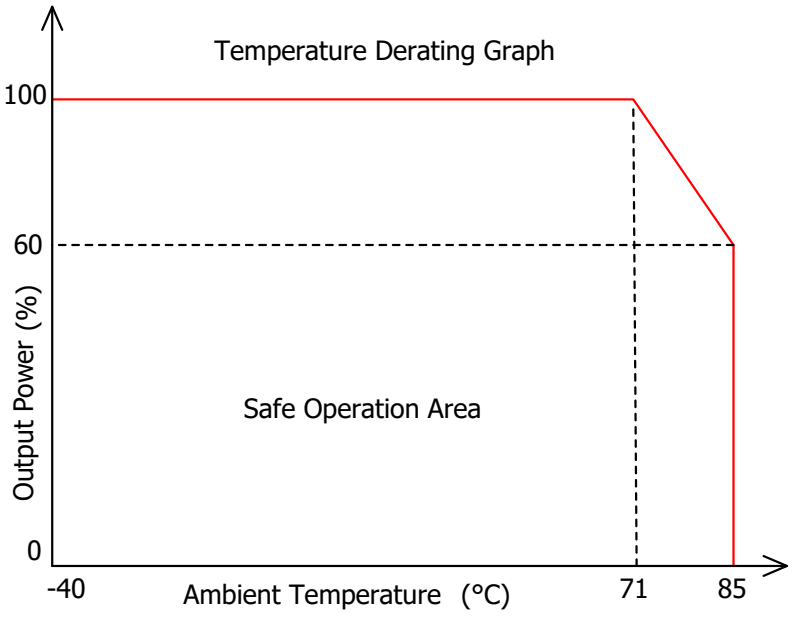

Figure 5. Derating Curve

©Copyrights 2000-2026, Analog Technologies, Inc. All Rights Reserved. Updated on 2/4/2026 1161 Ringwood Ct, #110, San Jose, CA 95131, U. S. A.

TYPICAL APPLICATIONS

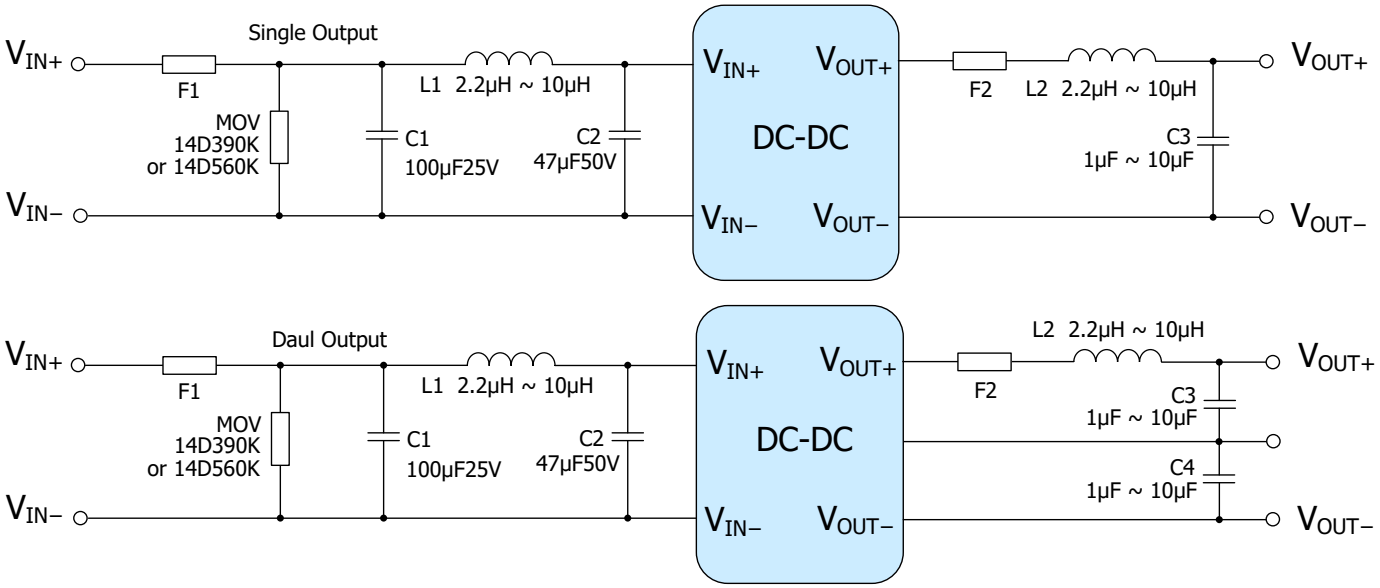

Figure 6. Typical Applications

Table 3. Recommended Values

F1	Input Time-delay Fuse	
F2 & F3	Output Time-delay Fuse, or Resettable Fuse (PTC)	
MOV	14D390K	Input Voltage: 12VDC
	14D560K	Input Voltage: 24VDC
C1 & C2	100μF/25V	Input Voltage: 2VDC
	47μF/50V	Input Voltage: 24VDC
C3 & C4	1.0μF ~ 10μF (High Frequency ESR)	
L1, L2 & L3	2.2μH ~ 10μH	

To further reduce the input and output ripple, the parameters of the LC filter can be appropriately increased, but it should be noted that the external capacitor at the output end should not be too large, and should be lower than the maximum capacitive load of the product.

NAMING PRINCIPLE

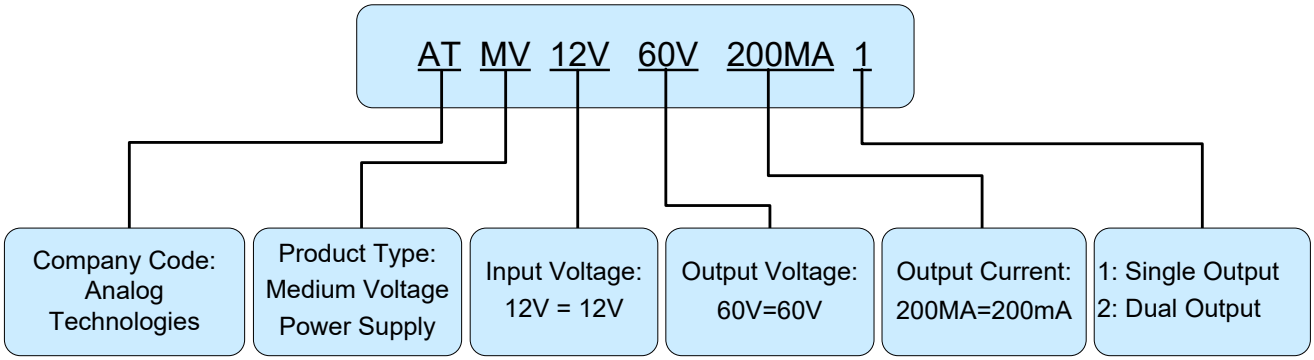

Figure 7. Naming Convention of ATMV12V60V200MA1

©Copyrights 2000-2026, Analog Technologies, Inc. All Rights Reserved. Updated on 2/4/2026

OUTLINE DIMENSIONS

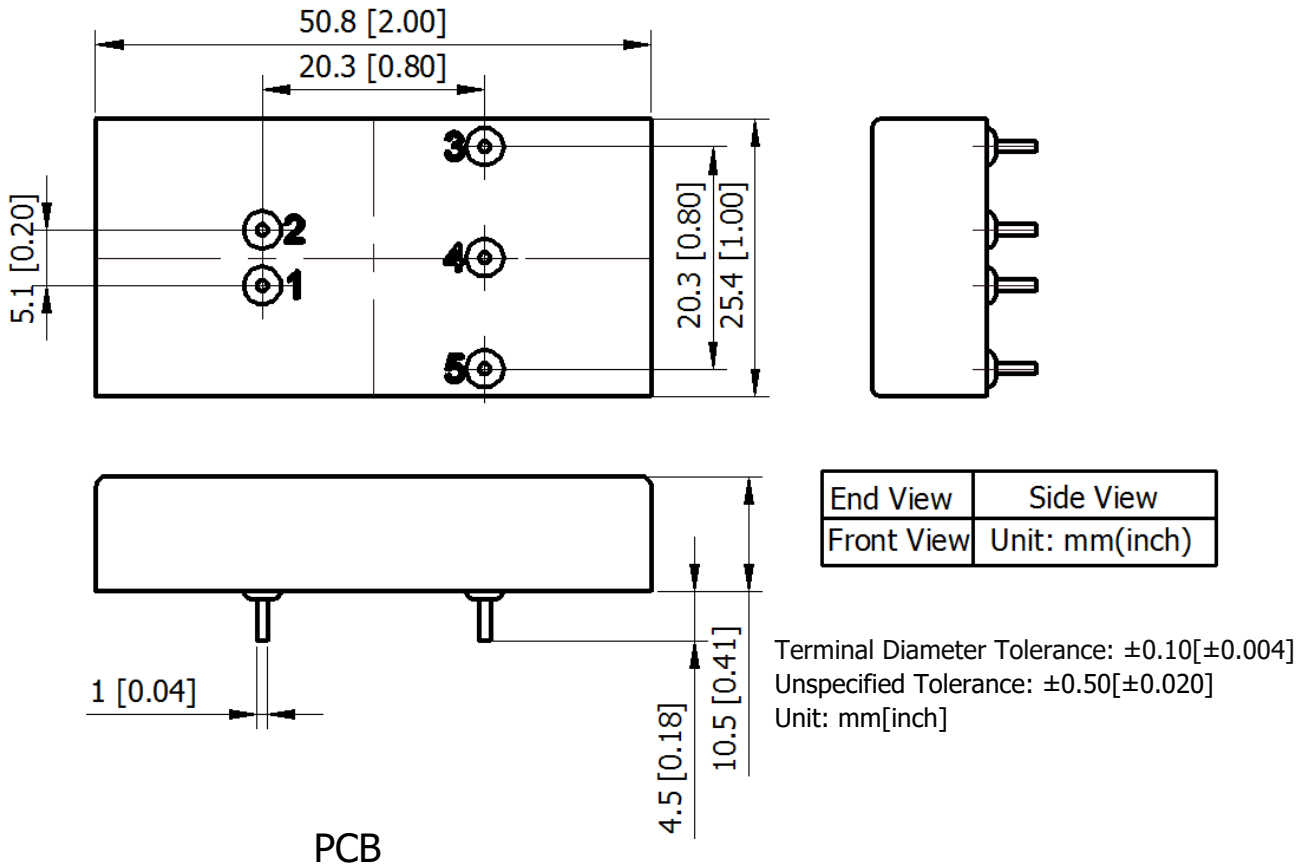

Pin	1	2	3	4	5
Single channel	In−	In+	Out+	NP	Out−
Dual channel	In−	In+	Out+	0V	Out−

Figure 8. Outline Dimensions

©Copyrights 2000-2026, Analog Technologies, Inc. All Rights Reserved. Updated on 2/4/2026 1161 Ringwood Ct, #110, San Jose, CA 95131, U. S. A.

ORDERING INFORMATION

Part Number	Buy Now
ATMV12V60V200MA1	* *

*: both and are our online store icons. Our products can be ordered from either one of them with the same pricing and delivery time.

Table 4. ATMV12V60V200MA1 and Its Families

Product Model	Input Voltage		Output Voltage	Output Current	Efficiency	MAX. Capacitive Load
	Typ.	Range	V	mA	%	µF
ATMV12V50V160MA1	12	9 ~ 18	50	160	78	100
ATMV12V100V80MA1			100	80	76	100
ATMV12V200V40MA1			200	40	75	68
ATMV12V300V20MA1			300	20	74	47
ATMV12V400V10MA1			400	10	73	33
ATMV12V500V8MA1			500	8	72	22
ATMV12V600V6.7MA1			600	6.7	70	10
ATMV12V700V4.3MA1			700	4.3	68	4.7
ATMV24V50V160MA1	24	18 ~ 36	100	80	78	100
ATMV24V200V40MA1			200	40	77	68
ATMV24V300V20MA1			300	20	75	47
ATMV24V400V10MA1			400	10	74	33
ATMV24V500V8MA1			500	8	73	22
ATMV24V600V6.7MA1			600	6.7	71	10
ATMV24V700V4.3MA1			700	4.3	70	4.7
ATMV12V50V80MA2	12	9 ~ 18	±50	±80	76	68
ATMV12V100V40MA2			±100	±40	75	68
ATMV12V150V20MA2			±150	±20	74	47
ATMV12V200V10MA2			±200	±10	73	33
ATMV12V250V8MA2			±250	±8.0	72	22
ATMV12V300V6.6MA2			±300	±6.6	70	10

©Copyrights 2000-2026, Analog Technologies, Inc. All Rights Reserved. Updated on 2/4/2026 1161 Ringwood Ct, #110, San Jose, CA 95131, U. S. A.

Product Model	Input Voltage		Output Voltage	Output Current	Efficiency	MAX. Capacitive Load
	Typ.	Range	V	mA	%	μF
ATMV24V50V80MA2	24	18 ~ 36	±50	±80	78	68
ATMV24V100V40MA2			±100	±40	77	68
ATMV24V150V20MA2			±150	±20	75	47
ATMV24V200V10MA2			±200	±10	74	33
ATMV24V250V8MA2			±250	±8.0	73	22
ATMV24V300V6.6MA2			±300	±6.6	71	10

NOTICE

1. ATI warrants performance of its products for one year to the specifications applicable at the time of sale, except for those being damaged by excessive abuse. Products found not meeting the specifications within one year from the date of sale can be exchanged free of charge.
2. ATI reserves the right to make changes to its products or to discontinue any product or service without notice, and advise customers to obtain the latest version of relevant information to verify, before placing orders, that the information being relied on is current and complete.
3. All products are sold subject to the terms and conditions of sale supplied at the time of order acknowledgment, including those pertaining to warranty, patent infringement, and limitation of liability. Testing and other quality control techniques are utilized to the extent ATI deems necessary to support this warranty. Specific testing of all parameters of each device is not necessarily performed, except those mandated by government requirements.
4. Customers are responsible for their applications using ATI products. In order to minimize risks associated with the customers' applications, adequate design and operating safeguards must be provided by the customers to minimize inherent or procedural hazards. ATI assumes no liability for applications assistance or customer product design.
5. ATI does not warrant or represent that any license, either express or implied, is granted under any patent right, copyright, mask work right, or other intellectual property right of ATI covering or relating to any combination, machine, or process in which such products or services might be or are used. ATI's publication of information regarding any third party's products or services does not constitute ATI's approval, warranty or endorsement thereof.
6. IP (Intellectual Property) Ownership: ATI retains the ownership of full rights for special technologies and/or techniques embedded in its products, the designs for mechanics, optics, plus all modifications, improvements, and inventions made by ATI for its products and/or projects.

©Copyrights 2000-2026, Analog Technologies, Inc. All Rights Reserved.