Figure 1. Top View of AHV12VPN10KV1MAW

FEATURES

- Input Power Voltage: 12V ± 1V
- Input Current Range: 250mA to 1.2A
- Output Voltage: 0 to ±10kV@CTRL = 0 to 5V
- Max. Output Current: 1mA
- Reference Voltage: 5V ± 0.05V
- Input Control Voltage: 0 to 5V
- Full Span Modulation on Output Voltage
- Electronic Shutdown Control

APPLICATIONS

This power module, AHV12VPN10KV1MAW, is designed for achieving DC-DC conversion from low voltage to high voltage as a power supply source. It can be used for:

- X-ray Machine
- Spectral Analysis
- Nondestructive Inspection
- Semiconductor Manufacturing Equipment
- Particle Accelerator
- Capillary Electrophoresis
- Particles Injection
- Physical Vapor Phase Deposition
- Electrospinning Preparation of Nanofiber
- Glass / Fabric Coating
- DC Reactive Magnetron Sputtering

DESCRIPTION

Figure 2 shows the connecting wires of AHV12VPN10KV1MAW, of which their detail information given in Table 1. The output voltage can be set to a constant value by connecting the CTRL port to the central tap of a POT (Potentiometer) corresponding to 0V to ±10kV proportionally at the output VOUT port as shown in Figure 3.

©Copyrights 2000-2026, Analog Technologies, Inc. All Rights Reserved. Updated on 7/17/2026 1161 Ringwood Ct, #110, San Jose, CA 95131, U. S. A.

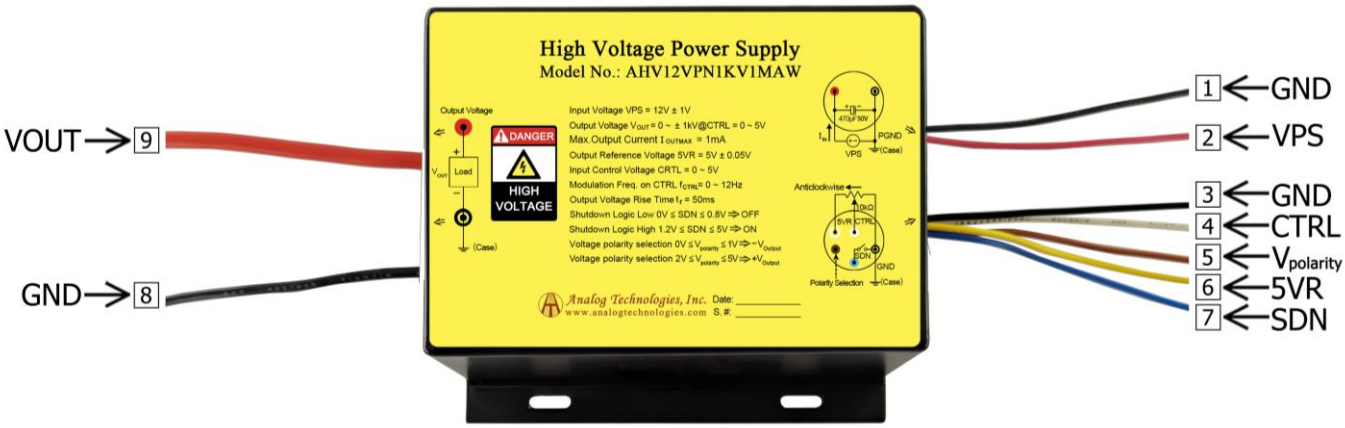

Figure 2. The Connecting Lead Wires of AHV12VPN10KV1MAW

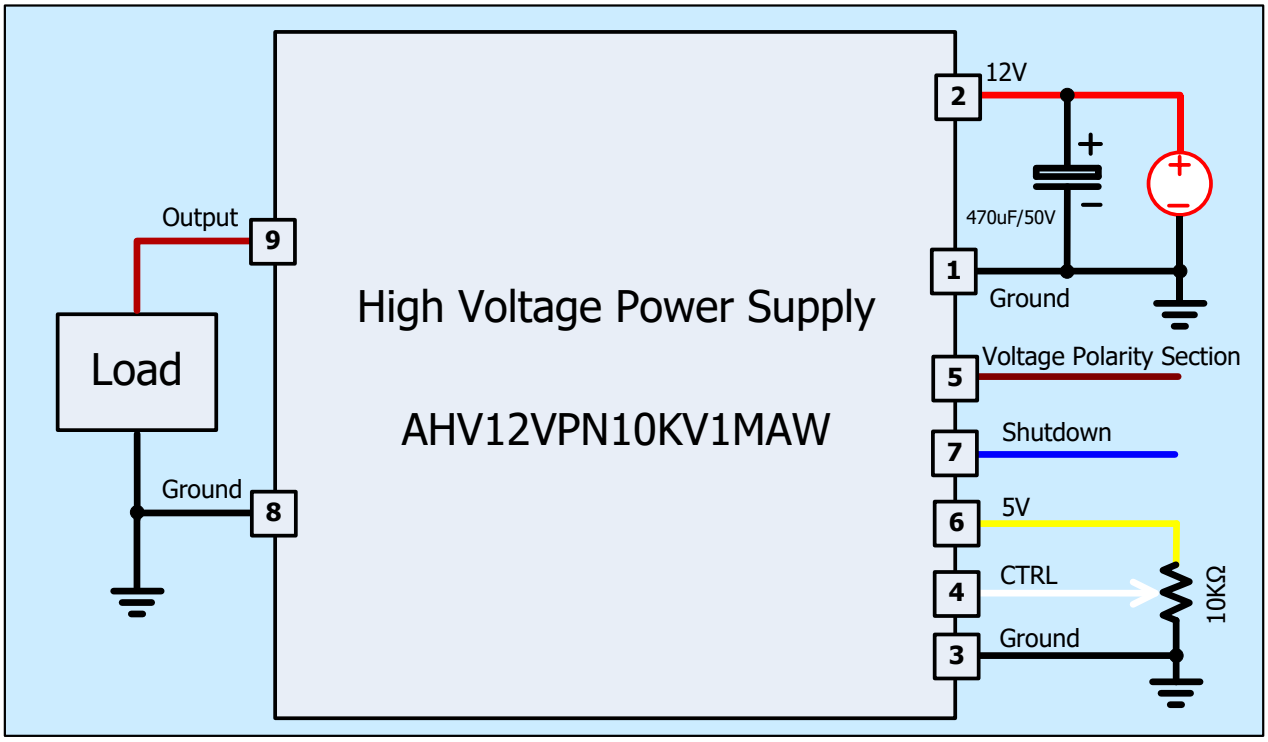

Figure 3. Setting Output to be a Constant Voltage

©Copyrights 2000-2026, Analog Technologies, Inc. All Rights Reserved. Updated on 7/17/2026 1161 Ringwood Ct, #110, San Jose, CA 95131, U. S. A.

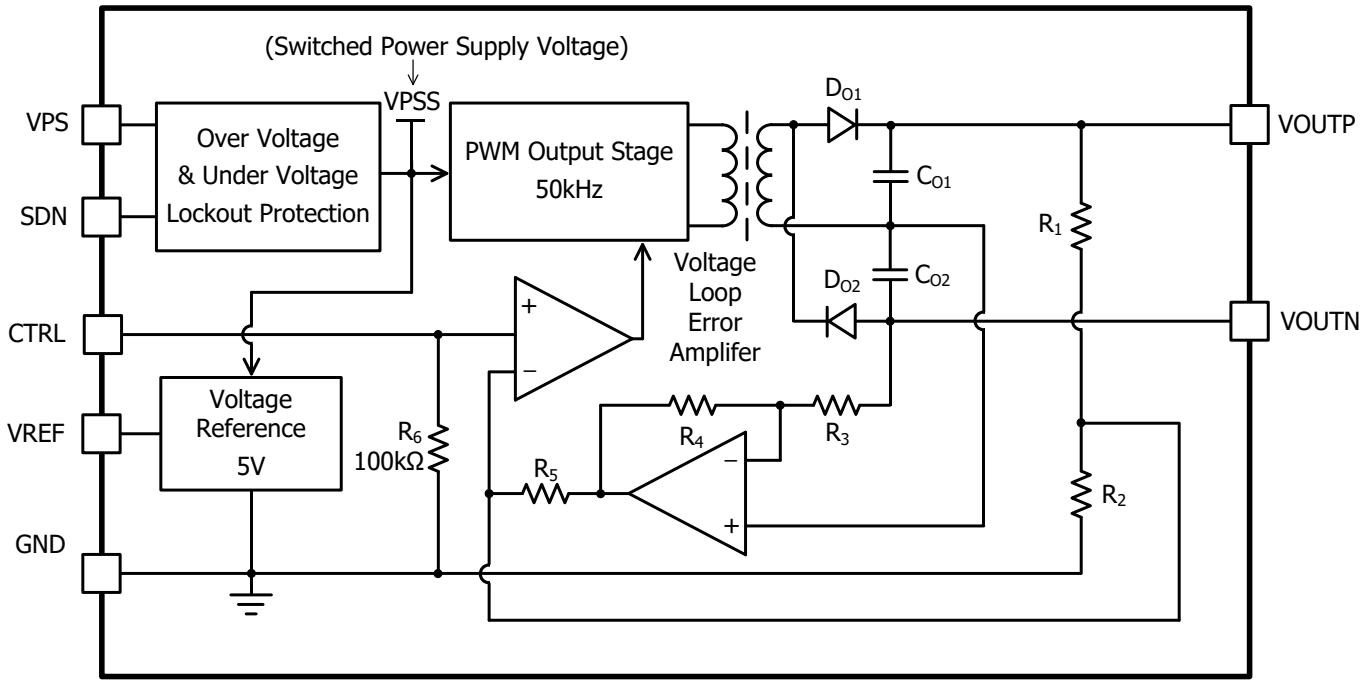

VOUTP = −VOUTN = N×V_{CTRL}, Where N is the amplification factor: N = R_1/R_2 = R_3/R_4, R5 = $R_1//R_2$

Figure 4. High Voltage Power Supply Function Block Diagram

Table 1. Pin Names, Colors, Functions and Specifications.

No.	Name	Color		Type	Description	Min.	Typ.	Max.
1	GND	Black	●	Ground for analog, digital and power signals.	Input GND		0V	
2	VPS	Red	●	Power input	Input voltage		12V	
3	GND	Black	●	Ground for analog, digital and power signals.	Control GND		0V	
4	CTRL	White	○	Analog input	Regulation	0V		5V
5	$V_{Polarity}$	Brown	●	Analog input Voltage Polarity Section	Positive Output Voltage	2V		5V
					Negative Output Voltage	0V		1V
6	5VR	Yellow	●	Analog output	Reference voltage		5V	
7	SDN	Blue	●	Digital input	Shutdown logic low	0V		0.8V
					Shutdown logic high	1.2V		5V
8	GND	Black	●	Power output	Output GND		0V	
9	VOUT	Brown	●	Power output	Output high voltage	0V		±10kV

©Copyrights 2000-2026, Analog Technologies, Inc. All Rights Reserved. Updated on 7/17/2026 1161 Ringwood Ct, #110, San Jose, CA 95131, U. S. A.

SPECIFICATIONS

Table 2. Characteristics. T_A = 25°C, unless otherwise noted.

Parameter		Symbol	Test Conditions	Min.	Typ.	Max.	Unit/Note
Input Power Supply Voltage		V_{VPS}		11	12	13	V
Input Power Supply Quiescent Current		I_{VPS_QC}	I_{VOUT} = 0mA	250	300	350	mA
Input Power Supply Current at Full Load		I_{VPS_FL}	I_{VOUT} = 1mA	1.1	1.2	1.3	A
Input Power Current at Shutdown		I_{VPS_SHDN}	T_A = −10°C ~ 55°C		13		mA
Modulation Voltage Range on CTRL		V_{CTRL}		0		5	V
Modulation Frequency Range on CTRL		f_{CTRL}		0		12	Hz
Shutdown Port Current		I_{SDNL}	V_{SDNL} < 0.8V	4		4.8	μA
		I_{SDNH}	1.2V < V_{SDNL} < 5V	0		3.6	μA
Shutdown Voltage Logic Low		V_{SDNL}		0		0.8	V
Shutdown Voltage Logic High		V_{SDNH}		1.2		5	V
Output Voltage		V_{VOUT}	I_{VOUT} = 0 ~ 1mA	0		±10000	V
Output Current Range		$I_{VOUTMAX}$	V_{VPS} = 11V ~ 13V	0		1	mA
Reference Voltage Output Range		V_{5VR}	T_A = −10°C ~ 55°C I_{5VR} ≤ 1mA	4.95	5	5.05	V
Output Load Resistance Range				$\frac{V_{VOUT}}{I_{VOUT}}$		∞	MΩ
Output Voltage Ripple		V_{VOUT_RP}	Bandwidth = 1MHz R_{LOAD} = 10MΩ	≤5			V_{P-P}
Output Voltage Temperature Coefficient		TCV_{VOUT}	V_{VPS} = 12V V_{CTRL} = V_{5VR} = 5V V_{VOUT} = ±10kV I_{VOUT} = 1mA T_A = −10°C ~ 55°C		≤0.1		%/°C
Output Voltage Range v.s. Temperature		$V_{VOUT}(T)$	V_{VPS} = 12V V_{CTRL} = V_{5VR} = 5V V_{VOUT} = ±10kV I_{VOUT} = 1mA T_A = −10°C ~ 55°C	$0.99V_{VOUT}$	V_{VOUT}	$1.01V_{VOUT}$	V
Output Voltage Drift	Short Term Drift	$\frac{\lvert\Delta V_{VOUT}/V_{VOUT}\rvert}{\Delta t\ (min)}$	V_{VPS} = 12V V_{CTRL} = V_{5VR} = 5V V_{VOUT} = ±10kV I_{VOUT} = 1mA T_A = −10°C ~ 55°C		≤0.3		%/min
	Long Term Drift	$\frac{\lvert\Delta V_{VOUT}/V_{VOUT}\rvert}{\Delta t\ (h)}$			≤0.5		%/h

©Copyrights 2000-2026, Analog Technologies, Inc. All Rights Reserved. Updated on 7/17/2026 1161 Ringwood Ct, #110, San Jose, CA 95131, U. S. A.

Parameter	Symbol	Test Conditions	Min.	Typ.	Max.	Unit/Note
Output Voltage Rise Time	t_r	V_{VOUT} (t_1) = ±1000V V_{VOUT} (t_2) = ±9000V R_{LOAD} = 10MΩ		50		ms
Output Voltage Fall Time	t_f	V_{VOUT} (t_2) = ±9000V V_{VOUT} (t_3) = ±1000V R_{LOAD} = 10MΩ		100		ms
Mean Time Between Failure	MTBF			1M		h
Instantaneous Short Circuit Current at the Output	I_{VOUT_SC}			≤100		mA
Load Regulation	$\frac{\lvert \Delta V_{VOUT}/V_{VOUT} \rvert}{\Delta I_{VOUT}}$	V_{VOUT} = ±10kV I_{VOUT} = 1mA		≤0.05		%/mA
Full Load Efficiency	η	V_{VPS} = 12V V_{VOUT} = ±10kV I_{VOUT} = 1mA		≥70		%
Operating Temperature Range	T_{opr}		−10		55	°C
Storage Temperature Range	T_{stg}		−20		85	°C
External Dimensions			140×100×55			mm
			5.51×3.94×2.17			inch
Weight				1000		g
				2.21		lbs
				35.27		Oz

©Copyrights 2000-2026, Analog Technologies, Inc. All Rights Reserved. Updated on 7/17/2026 1161 Ringwood Ct, #110, San Jose, CA 95131, U. S. A.

TESTING DATA

Test conditions: V_{VPS} = 12V, T_A = 25°C, R_{LOAD} = 10MΩ

DC Testing

The measured output voltage, V_{VOUT}, corresponding to the control port input voltage, V_{CTRL}, is shown in Figure 5. A 2V or higher input voltage is applied to voltage polarity selection, the output voltage is positive. When a 1V or lower input voltage is applied to voltage polarity selection, the output voltage is negative.

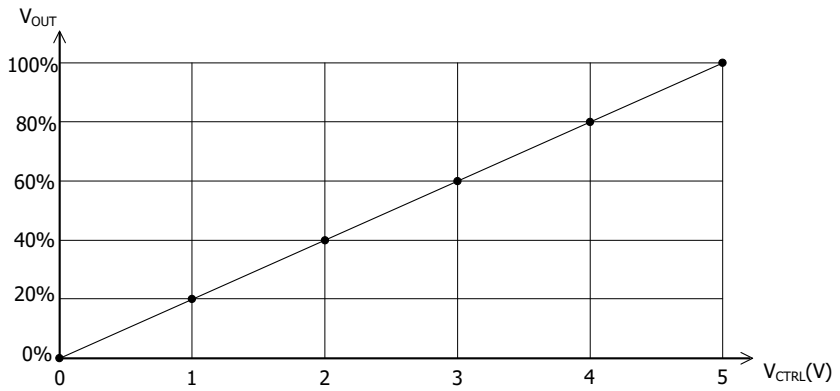

Figure 5. V_{CTRL} vs. V_{VOUT}

AC Testing

To test the analog modulation function, a triangle and sine-wave voltage signals are applied to the CTRL port as the input source signal respectively. Figure 6 and 7 show both the input signal and the output signal waveforms when using the triangle and sine-wave signals at the CTRL port respectively.

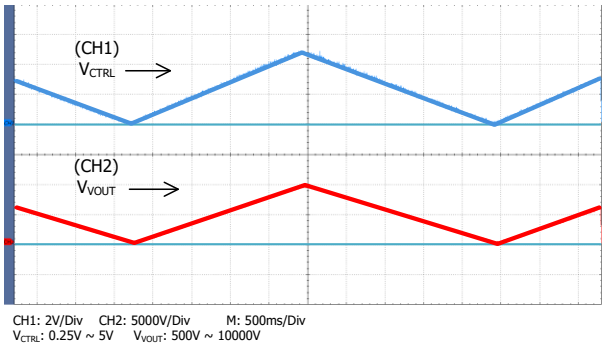

Figure 6A. Triangle Wave Modulation (V_{OUT}=10kV)

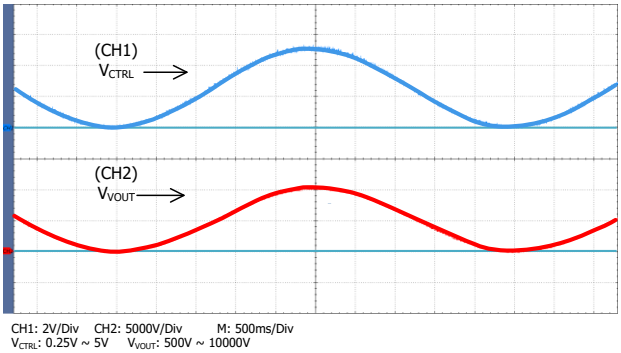

Figure 7A. Sine Wave Modulation (V_{OUT}=10kV)

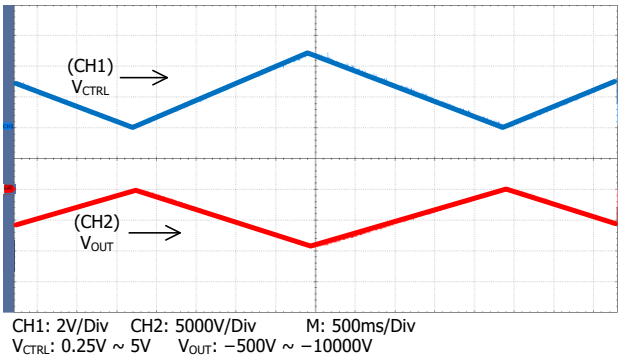

Figure 6B. Triangle Wave Modulation (V_{OUT}= −10kV)

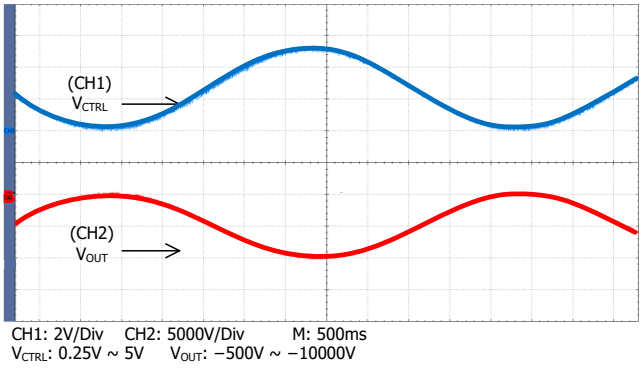

Figure 7B. Sine Wave Modulation (V_{OUT}= −10kV)

©Copyrights 2000-2026, Analog Technologies, Inc. All Rights Reserved. Updated on 7/17/2026 1161 Ringwood Ct, #110, San Jose, CA 95131, U. S. A.

To test the rise and fall times at the output, a step function signal is applied to the CTRL port. The testing results are shown in Figure 8, Figure 9, and Figure 10. As shown in Figure 9 and Figure 10, a square wave of 0.25V ~ 5V, f = 0.10Hz, is applied to CTRL port, the output waveform fall time is measured to be about 100ms and the rise time is about 50ms. These two values are not the same, that is because on the rising trail, the power supply injects a current to the load; while on the falling trail, the best the power supply can do is to stop its output current and let the load resistor drain the output filtering capacitor to a lower voltage, and the draining current is much smaller than the injection current.

V_{OUT}= 10kV

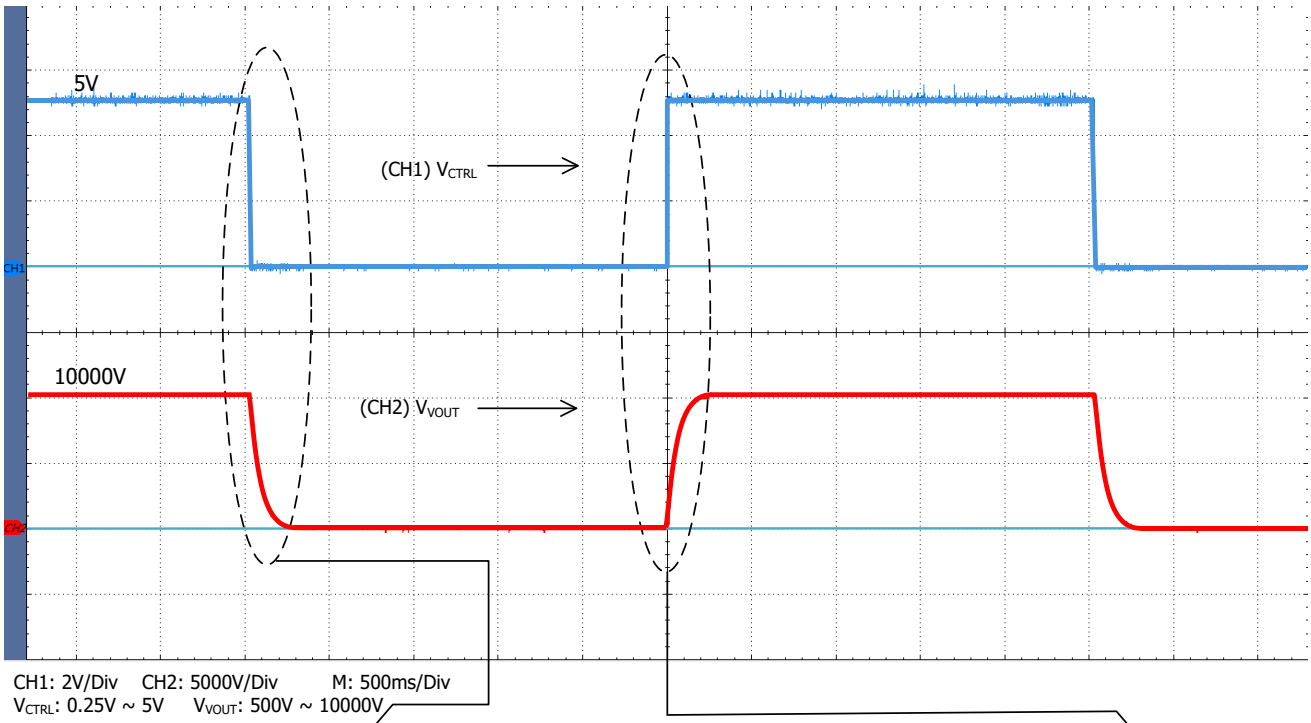

Figure 8A. Input vs. Output Waveforms for Square Wave Control

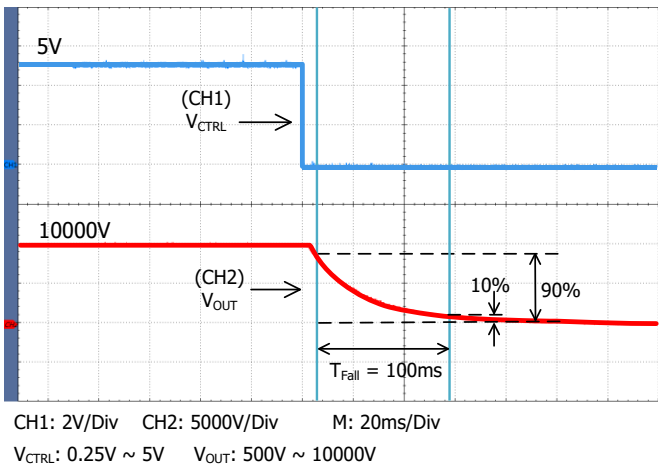

Figure 9A. Falling Trail for Large Signal Response

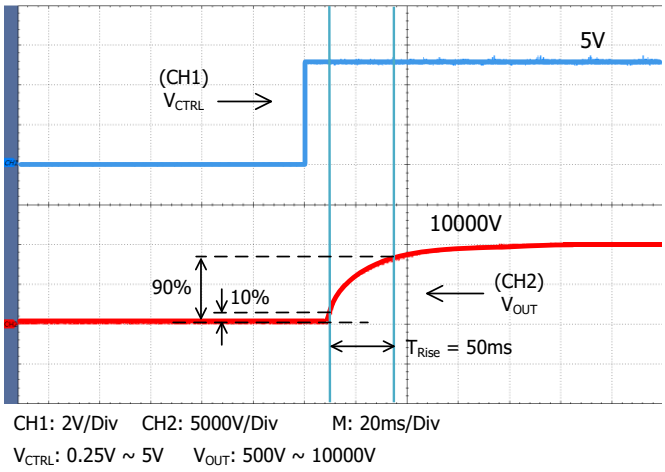

Figure 10A. Rising Trail for Large Signal Response

©Copyrights 2000-2026, Analog Technologies, Inc. All Rights Reserved. Updated on 7/17/2026 1161 Ringwood Ct, #110, San Jose, CA 95131, U. S. A.

V_{OUT}= −10kV

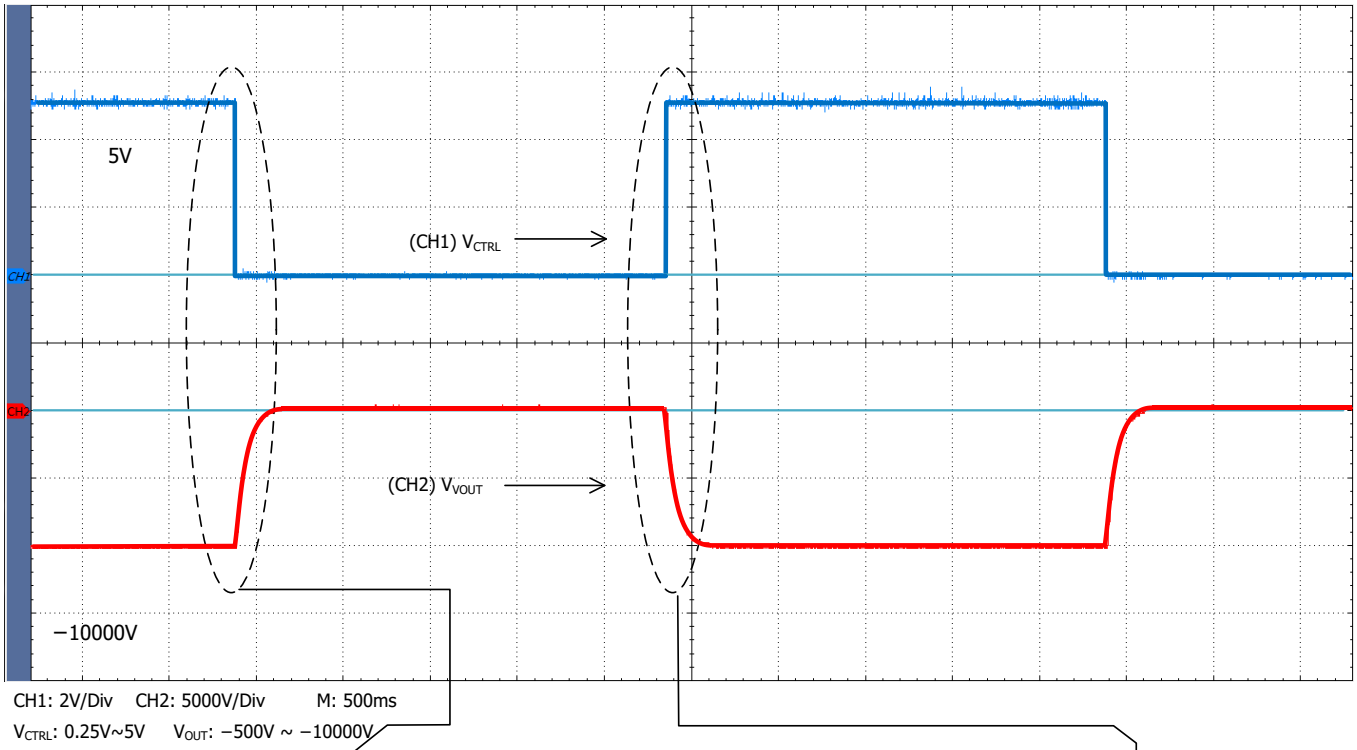

Figure 8B. Input vs. Output Waveforms for Square Wave Control

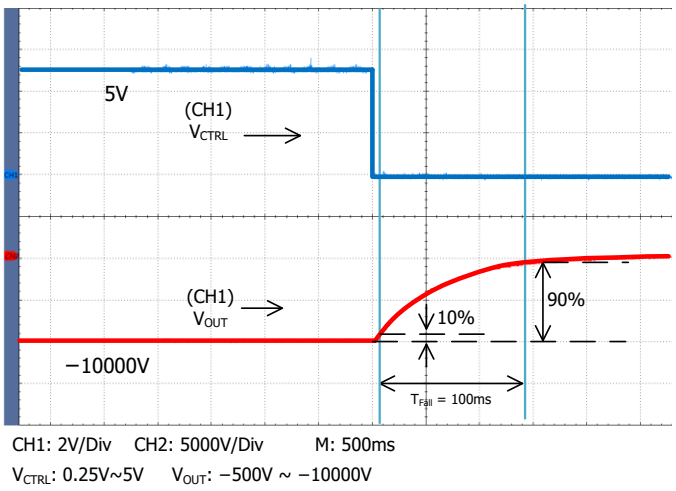

Figure 9B. Falling Trail for Large Signal Response

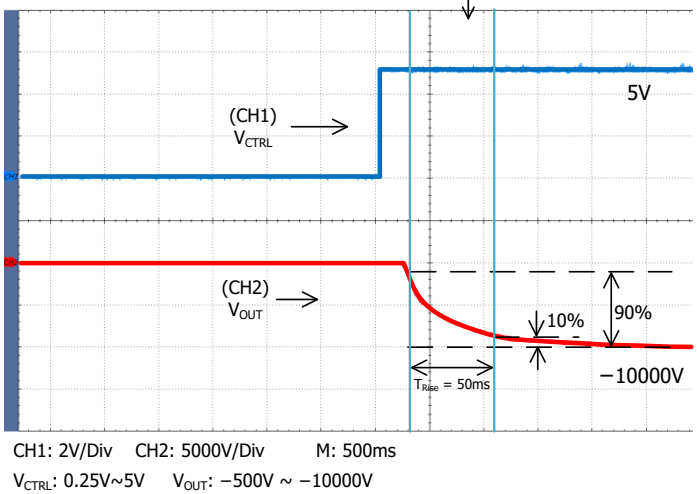

Figure 10B. Rising Trail for Large Signal Response

©Copyrights 2000-2026, Analog Technologies, Inc. All Rights Reserved. Updated on 7/17/2026 1161 Ringwood Ct, #110, San Jose, CA 95131, U. S. A.

NAMING PRINCIPLE

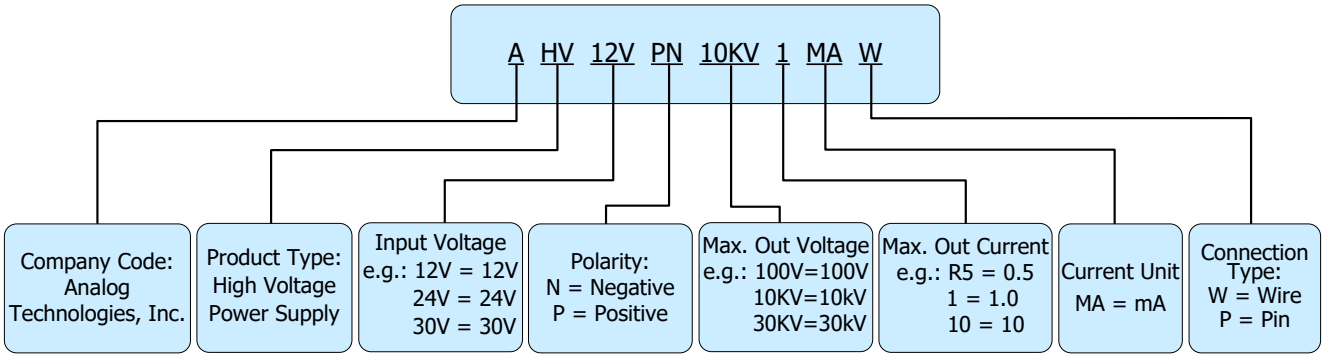

Figure 11. Naming Principle of AHV12VPN10KV1MAW

DIMENSIONS

Connecting Lead Wire Sizes and Lengths

Figure 12. Connecting Lead Wires of AHV12VPN10KV1MAW

Lead Wires	Diameter		Length	
	mm	inch	mm	inch
Thick brown lead wire	8.0	0.32	330 ± 1	12.99 ± 0.039
Black lead wire	2.6	0.10	330 ± 1	12.99 ± 0.039
Yellow, red, blue, black and white lead wires	2.6	0.10	330 ± 1	12.99 ± 0.039

©Copyrights 2000-2026, Analog Technologies, Inc. All Rights Reserved. Updated on 7/17/2026 1161 Ringwood Ct, #110, San Jose, CA 95131, U. S. A.

Outline Dimensions

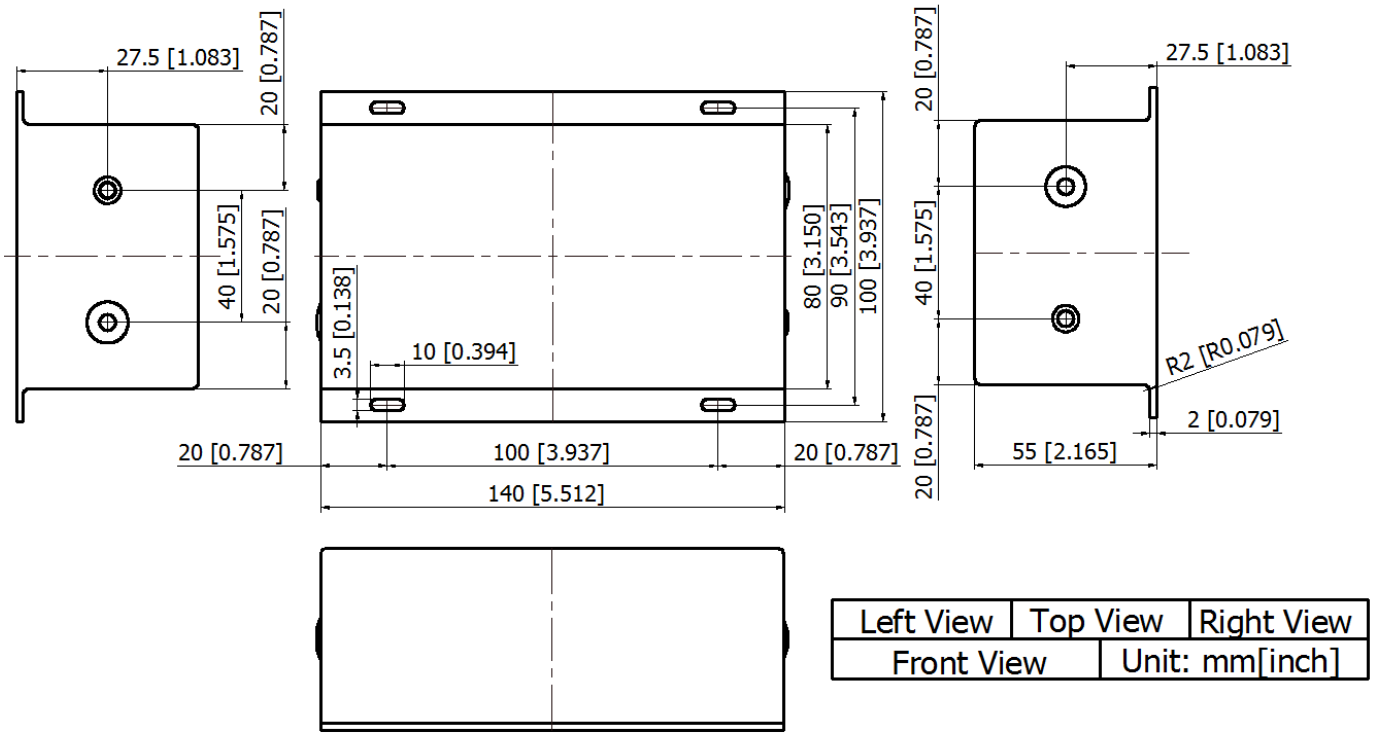

Figure 13. Outline Dimensions

ORDERING INFORMATION

Part Number	Buy Now
AHV12VPN10KV1MAW	* *

RELATED PRODUCTS

Input Voltage: 12V, Input Control Voltage: 0 to 5V, Efficiency: 70%.

Part #	Datasheet	Output Voltage (V)	Output Current (mA)	Description	Buy Now*
AHV12V500V1MAW		500	1	Positive 500V 1mA module with lead wires	* *
AHV12V500V2MAW		500	2	Positive 500V 2mA module with lead wires	* *
AHV12V500V5MAW		500	5	Positive 500V 5mA module with lead wires	* *
AHV12V500V10MAW		500	10	Positive 500V 10mA module with lead wires	* *
AHV12V500V20MAW		500	20	Positive 500V 20mA module with lead wires	* *
AHV12V500V50MAW		500	50	Positive 500V 50mA module with lead wires	* *

©Copyrights 2000-2026, Analog Technologies, Inc. All Rights Reserved. Updated on 7/17/2026 1161 Ringwood Ct, #110, San Jose, CA 95131, U. S. A.

Part #	Datasheet	Output Voltage (V)	Output Current (mA)	Description	Buy Now*
AHV12V1KV1MAW		1000	1	Positive 1kV 1mA module with lead wires	
AHV12V1KV2MAW		1000	2	Positive 1kV 2mA module with lead wires	
AHV12V1KV3MAW		1000	3	Positive 1kV 3mA module with lead wires	
AHV12V1KV5MAW		1000	5	Positive 1kV 5mA module with lead wires	
AHV12V1KV10MAW		1000	10	Positive 1kV 10mA module with lead wires	
AHV12V1KV20MAW		1000	20	Positive 1kV 20mA module with lead wires	
AHV12V1500V1MAW		1500	1	Positive 1.5kV 1mA module with lead wires	
AHV12V1500V2MAW		1500	2	Positive 1.5kV 2mA module with lead wires	
AHV12V1500V3MAW		1500	3	Positive 1.5kV 3mA module with lead wires	
AHV12V1500V5MAW		1500	5	Positive 1.5kV 5mA module with lead wires	
AHV12V1500V10MAW		1500	10	Positive 1.5kV 10mA module with lead wires	
AHV12V2KV1MAW		2000	1	Positive 2kV 1mA module with lead wires	
AHV12V2KV3MAW		2000	3	Positive 2kV 3mA module with lead wires	
AHV12V2KV5MAW		2000	5	Positive 2kV 5mA module with lead wires	
AHV12V2KV10MAW		2000	10	Positive 2kV 10mA module with lead wires	
AHV12V2500V1MAW		2500	1	Positive 2.5kV 1mA module with lead wires	
AHV12V2500V3MAW		2500	3	Positive 2.5kV 3mA module with lead wires	
AHV12V2500V5MAW		2500	5	Positive 2.5kV 5mA module with lead wires	
AHV12V3KV1MAW		3000	1	Positive 3kV 1mA module with lead wires	
AHV12V3KV2MAW		3000	2	Positive 3kV 2mA module with lead wires	
AHV12V3KV3MAW		3000	3	Positive 3kV 3mA module with lead wires	
AHV12V3KV5MAW		3000	5	Positive 3kV 5mA module with lead wires	
AHV12V3KV10MAW		3000	10	Positive 3kV 10mA module with lead wires	
AHV12V4KV1MAW		4000	1	Positive 4kV 1mA module with lead wires	
AHV12V4KV2R5MAW		4000	2.5	Positive 4kV 2.5mA module with lead wires	
AHV12V4KV5MAW		4000	5	Positive 4kV 5mA module with lead wires	
AHV12V5KV1MAW		5000	1	Positive 5kV 1mA module with lead wires	
AHV12V5KV2MAW		5000	2	Positive 5kV 2mA module with lead wires	
AHV12V5KV4MAW		5000	4	Positive 5kV 4mA module with lead wires	
AHV12V6KV1MAW		6000	1	Positive 6kV 1mA module with lead wires	

©Copyrights 2000-2026, Analog Technologies, Inc. All Rights Reserved. Updated on 7/17/2026 1161 Ringwood Ct, #110, San Jose, CA 95131, U. S. A.

Part #	Datasheet	Output Voltage (V)	Output Current (mA)	Description	Buy Now*
AHV12V6KV3MAW		6000	3	Positive 6kV 3mA module with lead wires	
AHV12V7KV1MAW		7000	1	Positive 7kV 1mA module with lead wires	
AHV12V7KV2MAW		7000	2	Positive 7kV 2mA module with lead wires	
AHV12V8KV1MAW		8000	1	Positive 8kV 1mA module with lead wires	
AHV12V8KV2R5MAW		8000	2.5	Positive 8kV 2.5mA module with lead wires	
AHV12V9KV1MAW		9000	1	Positive 9kV 1mA module with lead wires	
AHV12V10KV1MAW		10,000	1	Positive 10kV 1mA module with lead wires	
AHV12V25KV1MAW		25,000	1	Positive 30kV 0.7mA module with lead wires	
AHV12V30KVR5MAW		30,000	0.5	Positive 30kV 0.7mA module with lead wires	
AHV12VN500V1MAW		−500	1	Negative 500V 1mA module with lead wires	
AHV12VN500V2MAW		−500	2	Negative 500V 2mA module with lead wires	
AHV12VN500V5MAW		−500	5	Negative 500V 5mA module with lead wires	
AHV12VN500V10MAW		−500	10	Negative 500V 10mA module with lead wires	
AHV12VN500V20MAW		−500	20	Negative 500V 20mA module with lead wires	
AHV12VN500V50MAW		−500	50	Negative 500V 50mA module with lead wires	
AHV12VN1KV1MAW		−1000	1	Negative 1kV 1mA module with lead wires	
AHV12VN1KV2MAW		−1000	2	Negative 1kV 2mA module with lead wires	
AHV12VN1KV3MAW		−1000	3	Negative 1kV 3mA module with lead wires	
AHV12VN1KV5MAW		−1000	5	Negative 1kV 5mA module with lead wires	
AHV12VN1KV10MAW		−1000	10	Negative 1kV 10mA module with lead wires	
AHV12VN1KV20MAW		−1000	20	Negative 1kV 20mA module with lead wires	
AHV12VN1500V1MAW		−1500	1	Negative 1.5kV 1mA module with lead wires	
AHV12VN1500V2MAW		−1500	2	Negative 1.5kV 2mA module with lead wires	
AHV12VN1500V3MAW		−1500	3	Negative 1.5kV 3mA module with lead wires	
AHV12VN1500V5MAW		−1500	5	Negative 1.5kV 5mA module with lead wires	
AHV12VN1500V10MAW		−1500	10	Negative 1.5kV 10mA module with lead wires	
AHV12VN2KV1MAW		−2000	1	Negative 2kV 1mA module with lead wires	
AHV12VN2KV3MAW		−2000	3	Negative 2kV 3mA module with lead wires	
AHV12VN2KV5MAW		−2000	5	Negative 2kV 5mA module with lead wires	
AHV12VN2KV10MAW		−2000	10	Negative 2kV 10mA module with lead wires	

©Copyrights 2000-2026, Analog Technologies, Inc. All Rights Reserved. Updated on 7/17/2026 1161 Ringwood Ct, #110, San Jose, CA 95131, U. S. A.

Part #	Datasheet	Output Voltage (V)	Output Current (mA)	Description	Buy Now*
AHV12VN2500V1MAW		−2500	1	Negative 2.5kV 1mA module with lead wires	
AHV12VN2500V3MAW		−2500	3	Negative 2.5kV 3mA module with lead wires	
AHV12VN2500V5MAW		−2500	5	Negative 2.5kV 5mA module with lead wires	
AHV12VN3KV1MAW		−3000	1	Negative 3kV 1mA module with lead wires	
AHV12VN3KV2MAW		−3000	2	Negative 3kV 2mA module with lead wires	
AHV12VN3KV3MAW		−3000	3	Negative 3kV 3mA module with lead wires	
AHV12VN3KV5MAW		−3000	5	Negative 3kV 5mA module with lead wires	
AHV12VN3KV10MAW		−3000	10	Negative 3kV 10mA module with lead wires	
AHV12VN4KV1MAW		−4000	1	Negative 4kV 1mA module with lead wires	
AHV12VN4KV2R5MAW		−4000	2.5	Negative 4kV 2.5mA module with lead wires	
AHV12VN4KV5MAW		−4000	5	Negative 4kV 5mA module with lead wires	
AHV12VN5KV1MAW		−5000	1	Negative 5kV 1mA module with lead wires	
AHV12VN5KV2MAW		−5000	2	Negative 5kV 2mA module with lead wires	
AHV12VN5KV4MAW		−5000	4	Negative 5kV 4mA module with lead wires	
AHV12VN6KV1MAW		−6000	1	Negative 6kV 1mA module with lead wires	
AHV12VN6KV3MAW		−6000	3	Negative 6kV 3mA module with lead wires	
AHV12VN7KV1MAW		−7000	1	Negative 7kV 1mA module with lead wires	
AHV12VN7KV2MAW		−7000	2	Negative 7kV 2mA module with lead wires	
AHV12VN8KV1MAW		−8000	1	Negative 8kV 1mA module with lead wires	
AHV12VN8KV2R5MAW		−8000	2.5	Negative 8kV 2.5mA module with lead wires	
AHV12VN9KV1MAW		−9000	1	Negative 9kV 1mA module with lead wires	
AHV12VN10KV1MAW		−10000	1	Negative 10kV 1mA module with lead wires	
AHV12VN25KV1MAW		−25000	1	Negative 25kV 1mA module with lead wires	
AHV12VN30KVR5MAW		−30000	0.5	Negative 30kV 0.5mA module with lead wires	

*: both and are our online store icons. Our products can be ordered from either one of them with the same pricing and delivery time.

NOTICE

1. It is important to carefully read and follow the warnings, cautions, and product-specific notes provided with electronic components. These instructions are designed to ensure the safe and proper use of the component

©Copyrights 2000-2026, Analog Technologies, Inc. All Rights Reserved. Updated on 7/17/2026 1161 Ringwood Ct, #110, San Jose, CA 95131, U. S. A.

and to prevent damage to the component or surrounding equipment. Failure to follow these instructions could result in malfunction or failure of the component, damage to surrounding equipment, or even injury or harm to individuals. Always take the necessary precautions and seek professional assistance if unsure about proper use or handling of electronic components.

2. Please note that the products and specifications described in this publication are subject to change without prior notice as we continuously improve our products. Therefore, we recommend checking the product descriptions and specifications before placing an order to ensure that they are still applicable. We also reserve the right to discontinue the production and delivery of certain products, which means that not all products named in this publication may always be available.
3. This means that while ATI may provide information about the typical requirements and applications of their products, they cannot guarantee that their products will be suitable for all customer applications. It is the responsibility of the customer to evaluate whether an ATI product with the specified properties is appropriate for their particular application.
4. ATI warrants its products to perform according to specifications for one year from the date of sale, except when damaged due to excessive abuse. If a product fails to meet specifications within one year of the sale, it can be exchanged free of charge.
5. ATI reserves the right to make changes or discontinue products or services without notice. Customers are advised to obtain the latest information before placing orders.
6. All products are sold subject to terms and conditions of sale, including those pertaining to warranty, patent infringement, and limitation of liability. Customers are responsible for their applications using ATI products, and ATI assumes no liability for applications assistance or customer product design.
7. ATI does not grant any license, either express or implied, under any patent right, copyright, mask work right, or other intellectual property right of ATI.
8. ATI's publication of information regarding third-party products or services does not constitute approval, warranty, or endorsement.
9. ATI retains ownership of all rights for special technologies, techniques, and designs for its products and projects, as well as any modifications, improvements, and inventions made by ATI.
10. Despite operating the electronic modules as specified, malfunctions or failures may occur before the end of their usual service life due to the current state of technology. Therefore, it is crucial for customer applications that require a high level of operational safety, especially in accident prevention or life-saving systems where the malfunction or failure of electronic modules could pose a risk to human life or health, to ensure that suitable measures are taken. The customer should design their application or implement protective circuitry or redundancy to prevent injury or damage to third parties in the event of an electronic module malfunction or failure.

©Copyrights 2000-2026, Analog Technologies, Inc. All Rights Reserved. Updated on 7/17/2026 1161 Ringwood Ct, #110, San Jose, CA 95131, U. S. A.